榮豐工業股份有限公司
RONG FENG INDUSTRIAL Co.,LTD

# 產品規格圖
## (Standard of Products )

| | |
|---|---|
| 產品類別(Catologe): | IEC母座(IEC OUTLET) |
| 產品名稱(Name): | SS-130 Series |
| 規格(Standard): | IEC 603 20-2-2(sheet F) |
| 材質(Material): | PC |
| 電流(Current Rating): | (1)15A |
| | (2)10A |
| 電壓(Voltage Rating): | (1)250V AC |
| | (2)250V AC |
| 產品認證(Approvals): | (1)UL/CSA |
| | (2)VDE/NEMKO/CCC/KTL |

## 規　格　圖(Specification)

TERMINAL MODEL

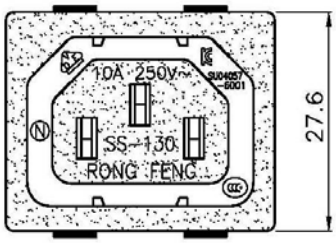


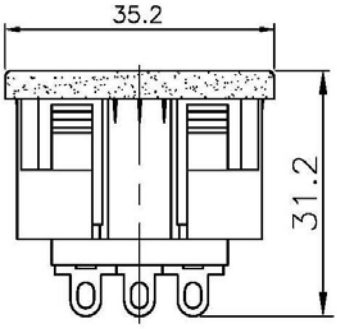


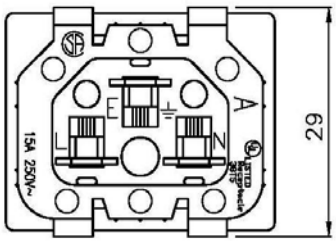


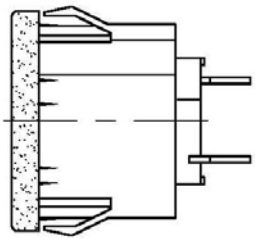

TEL:886(49)2252421　FAX:886(49)2253647　MAIL:rongfeng@rongfeng.com.tw